biwin.co.uk
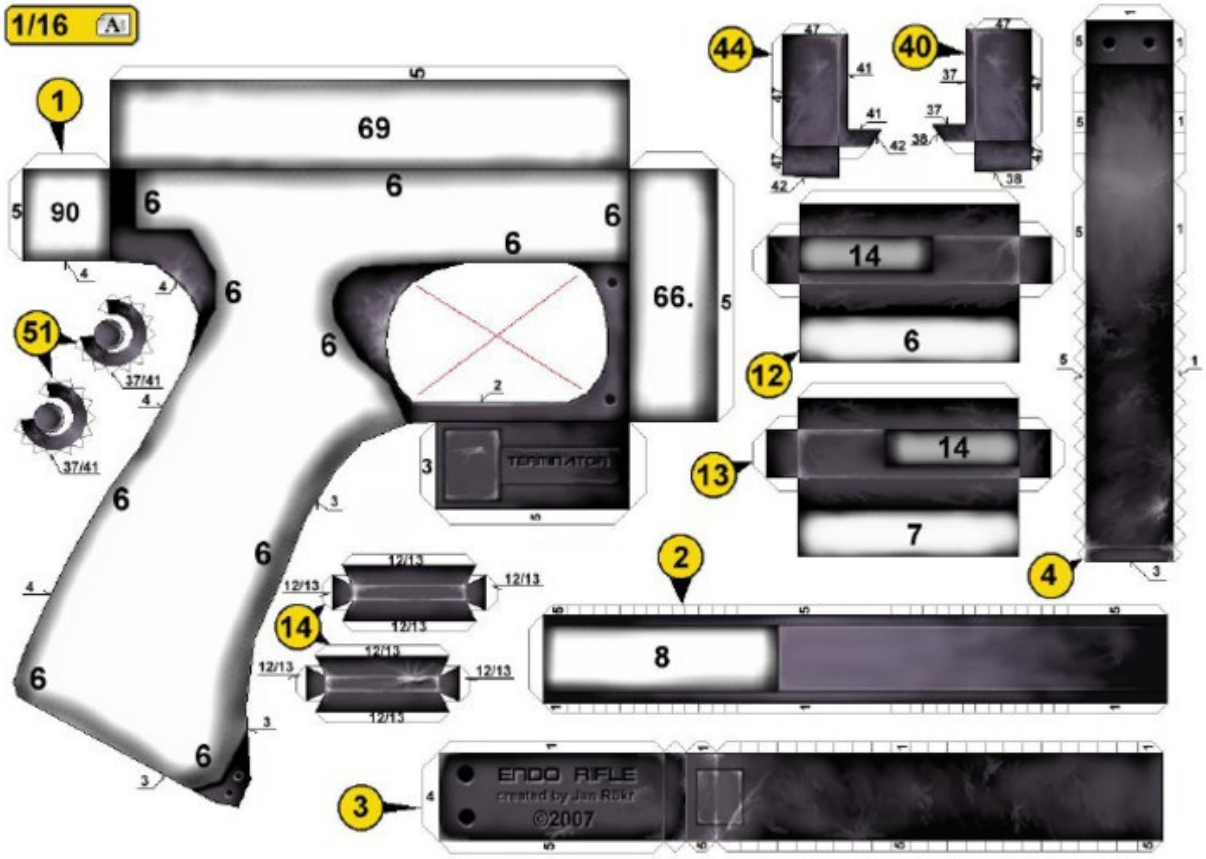
Gun Papercraft Papercraft Model Gun